involve
a journal of mathematics

Fox coloring and the minimum number of colors

Mohamed Elhamdadi and Jeremy Kerr

msp

2017 vol. 10, no. 2

INVOLVE 10:2 (2017)
dx.doi.org/10.2140/involve.2017.10.291

msp

Fox coloring and the minimum number of colors

Mohamed Elhamdadi and Jeremy Kerr

(Communicated by Kenneth S. Berenhaut)

We study Fox colorings of knots that are 13-colorable. We prove that any 13-colorable knot has a diagram that uses exactly five of the thirteen colors that are assigned to the arcs of the diagram. Due to an existing lower bound, this gives that the minimum number of colors of any 13-colorable knot is 5.

1. Introduction

Fox [1962] introduced a diagrammatic definition of colorability of a knot K by $\mathbb{Z}_m$ (the integers modulo m). This notion of colorability is clearly one of the simplest invariants of knots. For a natural number m greater than 1, a diagram D of a knot K is m-colorable if at every crossing, the sum of the colors of the under-arcs is twice the color of the over-arc (modulo m), as in Figure 1.

It is well known [Fox 1962] that for a prime p, a knot K is p-colorable if and only if p divides the determinant of K. The problem of finding the minimum number of colors for p-colorable knots with p prime and less than or equal to 11 was studied in [Satoh 2009; Oshiro 2010; Lopes and Matias 2012; Hayashi et al. 2012]. For example, Satoh [2009] proved that any 5-colorable knot admits a nontrivially 5-colored diagram where the coloring assignment uses only four of the five available colors. For a prime p, let K be a p-colorable knot and let $C_p(K)$ denote the minimum number of colors among all diagrams of the knot K. In [Nakamura et al. 2013], it was proved that $C_p(K) \geq \lfloor \log_2 p \rfloor + 2$. This implies that in our case, $p = 13$, the minimum number of colors of 13-colorable knots is greater than or equal to 5. In fact, the goal of this article is to prove equality, that is, $C_{13}(K) = 5$.

2. Fox coloring and the minimum number of colors of 13-colorable knots

Notation. We use $\{a\,|\,b\,|\,c\}$ to denote a crossing, as in Figure 1, where a and c are the colors of the under-arcs, b is the color of the over-arc and $a + c \equiv 2b \bmod 13$. When the crossing is of the type $\{c\,|\,c\,|\,c\}$ (trivial coloring), we will omit over- and under-crossings and draw the arcs crossing each other.

MSC2010: 57M25.
Keywords: knots, fox colorings, minimum number of colors.

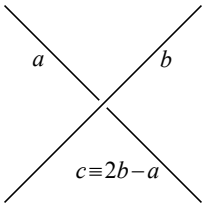

Figure 1

Theorem 2.1. *Any* 13*-colorable knot has a* 13*-colored diagram with exactly five colors. Thus,* $C_{13}(K) = 5$ *for any* 13*-colorable knot K.*

Proof. We prove this theorem using eight lemmas. In each of the following lemmas we decrease the coloring scheme of the diagram by one color c. To accomplish this we first transform any crossings of the form $\{c|c|c\}$. That is, when c is both an over-arc and an under-arc, we remove c as an over-arc by transforming any crossings of the form $\{a|c|2c-a\}$, where $a \in \mathbb{Z}_{13} \setminus \{c\}$. Finally, we complete each lemma by removing c as an under-arc in a case-by-case method. In these under-arc cases we must consider when c connects two crossings of the same color and when c connects two crossings of different colors. □

Eliminating the color 12.

Lemma 2.2. *Any* 13*-colorable knot has a* 13*-colored diagram D with no arc colored by* 12*.*

Proof. Let $c = 12$. We first transform any crossing of the form $\{12|12|12\}$. If there is any such crossing, there is an adjacent crossing of the form $\{12|a|2a+1\}$ or $\{a|12|11-a\}$, where $a \in \mathbb{Z}_{13} \setminus \{12\}$. In either case, since $11 - a \neq 12$ and $2a + 1 \neq 12$ for any a in $\mathbb{Z}_{13} \setminus \{12\}$, we transform the diagram as in Figures 2 and 3.

Next, we remove 12 as an over-arc by transforming any crossings of the form $\{a|12|11-a\}$. Since $2a + 1 \neq 12$ and $3a + 2 \neq 12$ for any $a \in \mathbb{Z}_{13} \setminus \{12\}$, we transform the diagram as in Figure 4.

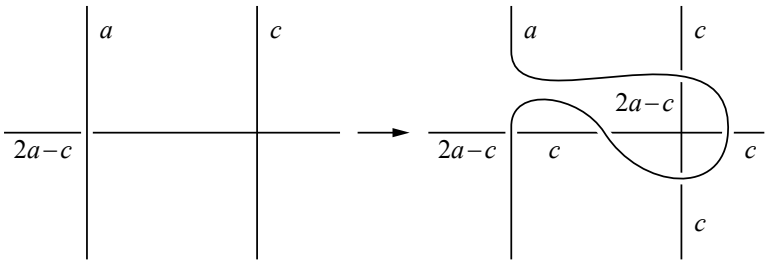

Figure 2

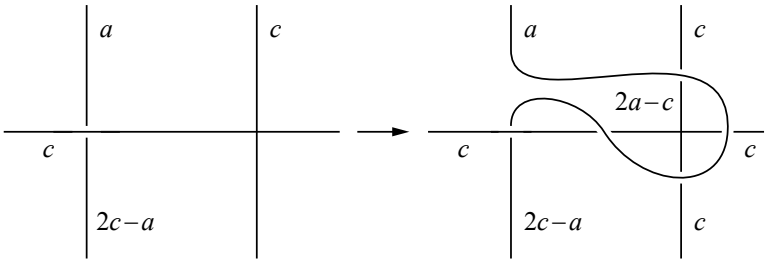

Figure 3

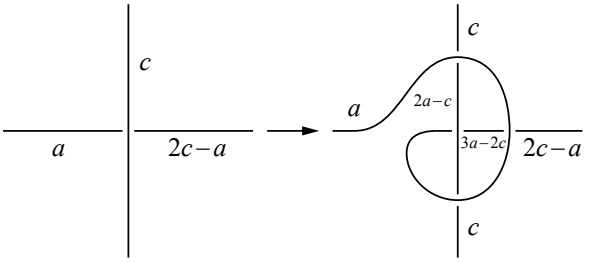

Figure 4

We complete the proof of the lemma by removing 12 as an under-arc in a case-by-case method. We first consider the case where 12 is an under-arc connecting two crossings of the form $\{12|a|2a+1\}$. Since $2a+1 \neq 12$, $3a+2 \neq 12$, and $4a+3 \neq 12$ for any $a \in \mathbb{Z}_{13} \setminus \{12\}$, we transform the diagram as in Figure 5.

Now we consider the case where 12 is an under-arc connecting two crossings of the forms $\{2a+1|a|12\}$ and $\{12|2a+1|4a+3\}$. Since $2a+1 \neq 12$ and $3a+2 \neq 12$ for any $a \in \mathbb{Z}_{13} \setminus \{12\}$, we transform the diagram as in Figure 6.

Lastly we consider the case where 12 is an under-arc connecting two crossings of the forms $\{2a+1|a|12\}$ and $\{12|b|2b+1\}$, where $a \neq b$ and $b \neq 2a+1$ for any a and b in $\mathbb{Z}_{13}\setminus\{12\}$. Since $2a-2b-1 \neq 12$ and $2a-b \neq 12$ for any a and b in $\mathbb{Z}_{13}\setminus\{12\}$ (from $a \neq b$ and $b \neq 2a+1$ respectively), we transform the diagram as in Figure 7. □

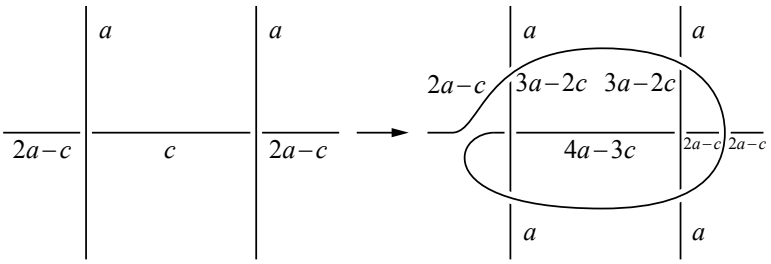

Figure 5

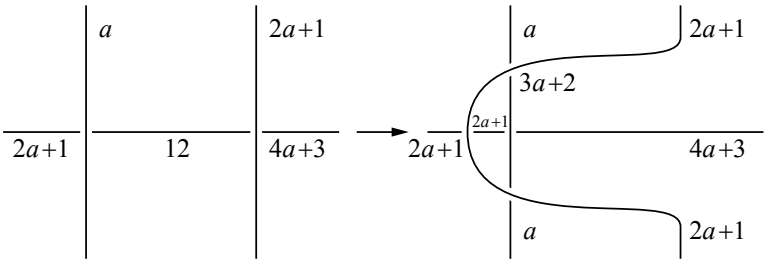

Figure 6

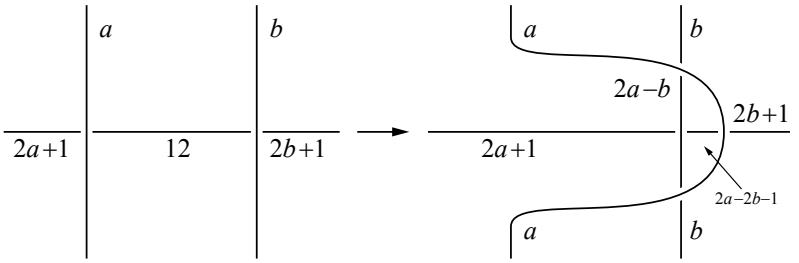

Figure 7

Eliminating the color 11.

Lemma 2.3. *Any* 13*-colorable knot has a* 13*-colored diagram* D *with no arc colored by* 11 *or* 12*.*

Proof. Let $c = 11$. By the previous lemma we assume that no arc in D is colored by 12. We first transform any crossing of the form $\{11|11|11\}$. If there is any such crossing, there is an adjacent crossing of the form $\{11|a|2a+2\}$ or $\{a|11|9-a\}$, where a is in $\mathbb{Z}_{13} \setminus \{11, 12\}$. If $a \neq 5, 10$, then $9 - a \neq 11, 12$ and $2a + 2 \neq 11, 12$ for any a in $\mathbb{Z}_{13} \setminus \{5, 10, 11, 12\}$, so we transform the diagram as in Figures 2 and 3.

If $a = 5$ as an under-arc, we transform the diagram as in Figure 8. Now, a cannot equal 5 as an over-arc, otherwise $2a + 2 = 12$, contradicting our assumption that no arc is colored by 12.

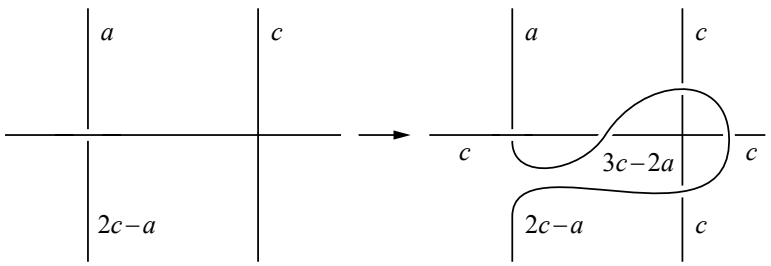

Figure 8

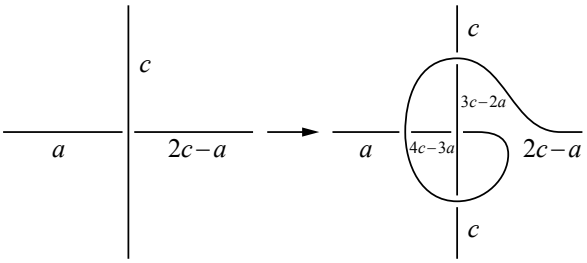

Figure 9

If $a = 10$ as an over-arc, we transform the diagram as in Figure 2. Similarly a cannot equal 10 as an under-arc, otherwise $9 - a = 12$, which is a contradiction.

Next, we remove 11 as an over-arc by transforming any crossings of the form $\{a\,|\,11\,|\,9-a\}$. Since $9 - a \neq 11, 12$, we have $a \neq 10$. Therefore if $a \neq 5, 7$ then $2a + 2 \neq 11, 12$ and $3a + 4 \neq 11, 12$ for any a in $\mathbb{Z}_{13} \setminus \{5, 7, 10, 11, 12\}$, and we transform the diagram as in Figure 4. If $a = 5$ or $a = 7$, we transform the diagram as in Figure 9.

We complete the proof of the lemma by removing 11 as an under-arc in a case-by-case method. We first consider the case where 11 is an under-arc connecting two crossings of the form $\{11\,|\,a\,|\,2a+2\}$. Since $2a + 2 \neq 11, 12$, we have $a \neq 5$. If $a \neq 7, 8$, then $3a+4 \neq 11, 12$ and $4a+6 \neq 11, 12$ for any a in $\mathbb{Z}_{13} \setminus \{5, 7, 8, 11, 12\}$, and we transform the diagram as in Figure 5. If $a = 7$, we transform the diagram as in Figure 10. If $a = 8$, we transform the diagram as in Figure 11.

Now we consider the case where 11 is an under-arc connecting two crossings of the forms $\{2a+2\,|\,a\,|\,11\}$ and $\{11\,|\,b\,|\,2b+2\}$, where $a \neq b$ for any a and b in $\mathbb{Z}_{13} \setminus \{5, 11, 12\}$. (Note $a, b \neq 5$, otherwise $2a + 2 = 12$ or $2b + 2 = 12$.)

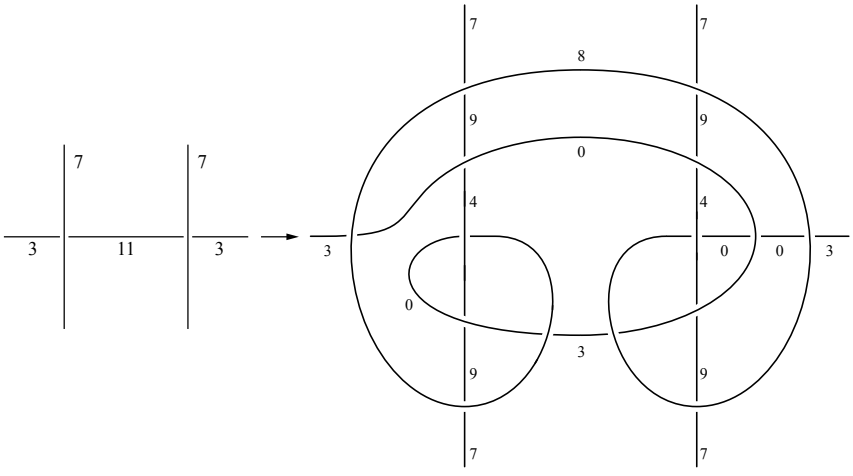

Figure 10

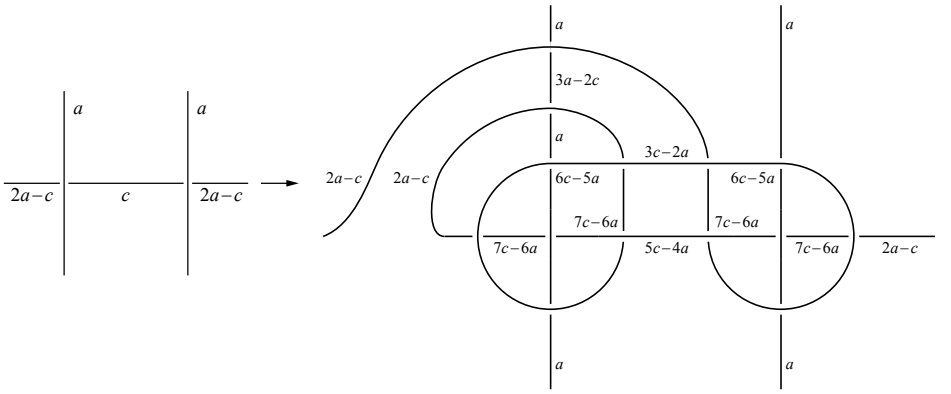

Figure 11

If $(a, b) \neq (0, 6), (6, 0), (3, 7), (7, 3)$ then either

$$2a - 2b - 2 \neq 11, 12 \quad \text{and} \quad 2a - b \neq 11, 12$$

or

$$2b - 2a - 2 \neq 11, 12 \quad \text{and} \quad 2b - a \neq 11, 12$$

for any a and b in $\mathbb{Z}_{13} \setminus \{5, 11, 12\}$, and we transform the diagram as in Figure 12.

If $(a, b) = (0, 6)$, we transform the diagram as in Figure 13. A similar transformation works for the case $(a, b) = (6, 0)$.

If $(a, b) = (3, 7)$, we transform the diagram as in Figure 14. A similar transformation works for the case $(a, b) = (7, 3)$. □

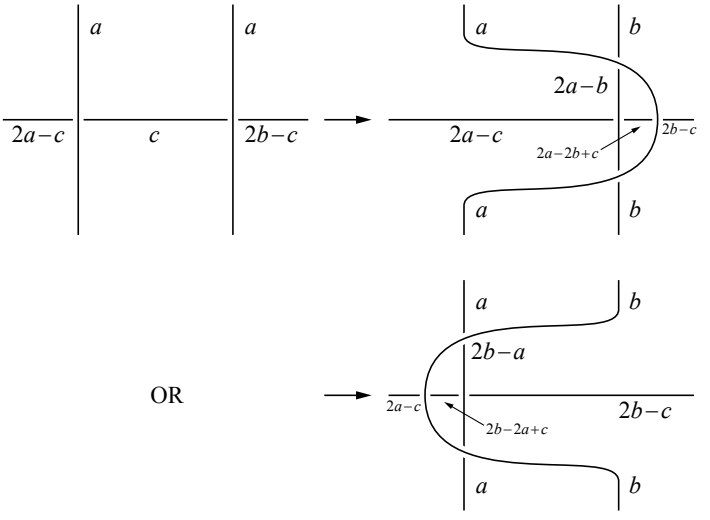

Figure 12

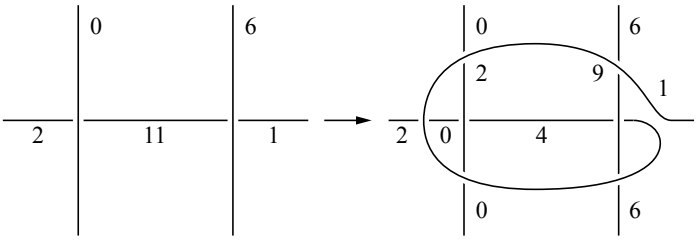

Figure 13

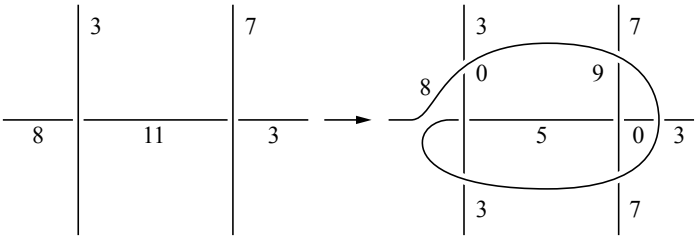

Figure 14

Eliminating the color 7.

Lemma 2.4. *Any* 13*-colorable knot has a* 13*-colored diagram* D *with no arc colored by* 7, 11, *or* 12.

Proof. Let $c = 7$. By the previous lemmas we assume that no arc in D is colored by 11 or 12. We first transform any crossing of the form $\{7|7|7\}$. If there is any such crossing, there is an adjacent crossing of the form $\{7|a|2a+6\}$ or $\{a|7|1-a\}$, where a is in $\mathbb{Z}_{13}\setminus\{7, 11, 12\}$. If $a \neq 2, 3, 9$ then $1-a \neq 7, 11, 12$ and $2a+6 \neq 7, 11, 12$ for any a in $\mathbb{Z}_{13}\setminus\{2, 3, 7, 9, 11, 12\}$, so we transform the diagram as in Figures 2 and 3.

If $a = 2$ as an over-arc, we transform the diagram as in Figure 2. Note a cannot equal 2 as an under-arc, otherwise $1 - a = 12$, contradicting our assumption that no arc is colored by 12.

Now a cannot be 3 as an over-arc or an under-arc, otherwise $1 - a = 11$ and $2a + 6 = 12$, contradicting our assumption that no arc is colored by 11 or 12. If $a = 9$ as an under-arc, we transform the diagram as in Figure 8. Note a cannot equal 9 as an over-arc, otherwise $2a + 6 = 11$, contradicting our assumption that no arc is colored by 11. Therefore any crossings of the form $\{7|7|7\}$ are removed.

Next, we remove 7 as an over-arc by transforming any crossings of the form $\{a|7|1-a\}$. Since $1-a \neq 7, 11, 12$, we have $a \neq 2, 3$. Therefore if $a \neq 0, 4, 9$ then $2a+6 \neq 7, 11, 12$ and $3a+12 \neq 7, 11, 12$ for any a in $\mathbb{Z}_{13}\setminus\{0, 2, 3, 4, 7, 9, 11, 12\}$, and we transform the diagram as in Figure 4. If $a = 0, 4, 9$, we transform the diagram as in Figure 9.

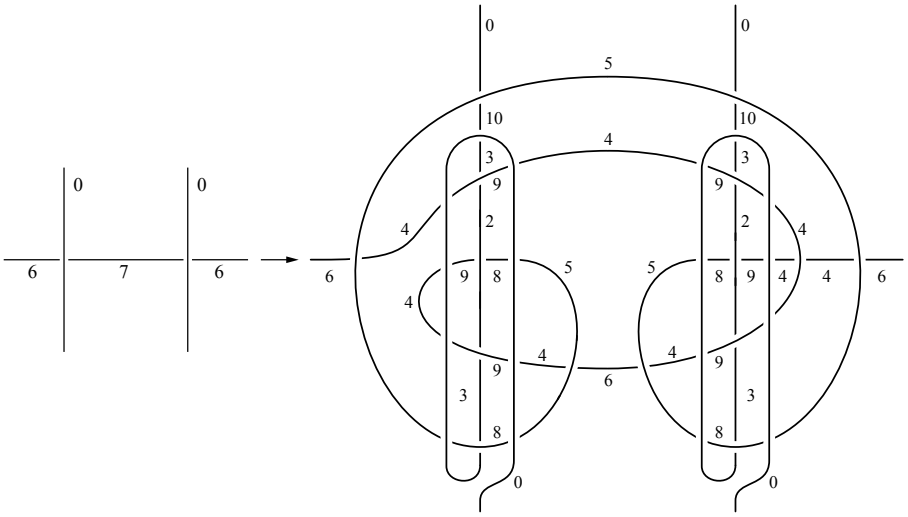

Figure 15

We complete the proof of the lemma by removing 7 as an under-arc in a case-by-case method. We first consider the case where 7 is an under-arc connecting two crossings of the form $\{7|a|2a+6\}$. Since $2a+6 \neq 7, 11, 12$, we have $a \neq 3, 9$. If $a \neq 0, 4, 5, 8$ then $3a+12 \neq 7, 11, 12$ and $4a+5 \neq 7, 11, 12$ for any a in $\mathbb{Z}_{13} \setminus \{0, 3, 4, 5, 7, 8, 9, 11, 12\}$, and we transform the diagram as in Figure 5. If $a = 0$, we transform the diagram as in Figure 15. If $a = 4$, we transform the diagram as in Figure 16. If $a = 5$, we transform the diagram as in Figure 17. If $a = 8$, we transform the diagram as in Figure 11.

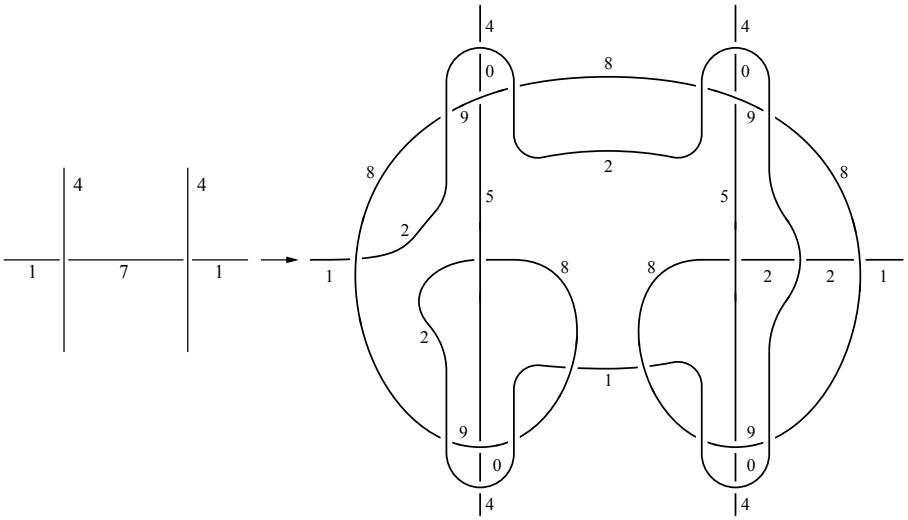

Figure 16

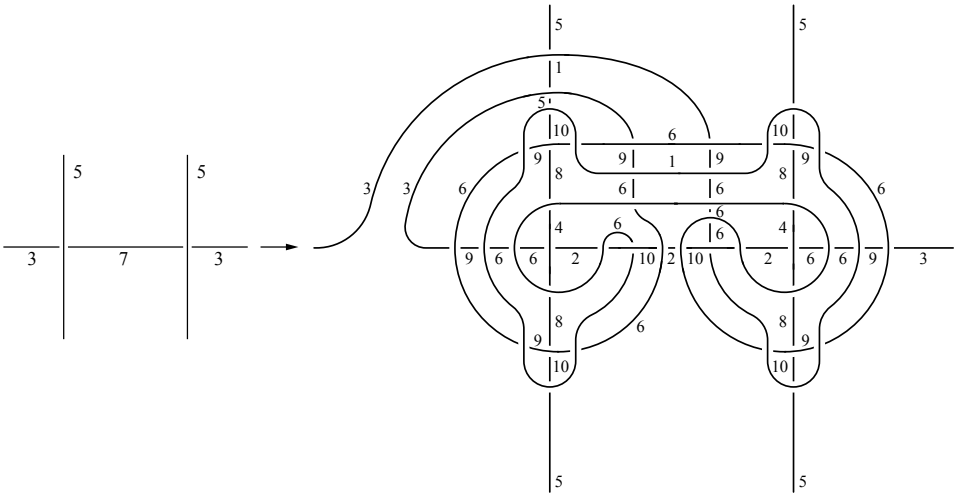

Figure 17

Now we consider the case where 7 is an under-arc connecting two crossings of the forms $\{2a{+}6|a|7\}$ and $\{7|b|2b{+}6\}$, where $a \neq b$ for any a and b in $\mathbb{Z}_{13} \setminus \{3, 7, 9, 11, 12\}$. (Note $a, b \neq 3, 9$, otherwise $2a + 6 = 11, 12$ or $2b + 6 = 11, 12$.) If

$$(a, b) \neq (0, 2), (2, 0), (0, 6), (6, 0), (1, 4), (4, 1), (4, 8), (8, 4)$$

then either

$$2a - 2b - 6 \neq 7, 11, 12 \quad \text{and} \quad 2a - b \neq 7, 11, 12$$

or

$$2b - 2a - 6 \neq 7, 11, 12 \quad \text{and} \quad 2b - a \neq 7, 11, 12$$

for any a and b in $\mathbb{Z}_{13} \setminus \{3, 7, 9, 11, 12\}$, and we transform the diagram as in Figure 12.

If $(a, b) = (0, 2)$, we transform the diagram as in Figure 18. The case $(a, b) = (2, 0)$ is similar.

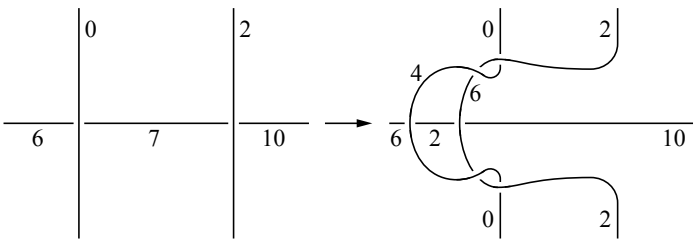

Figure 18

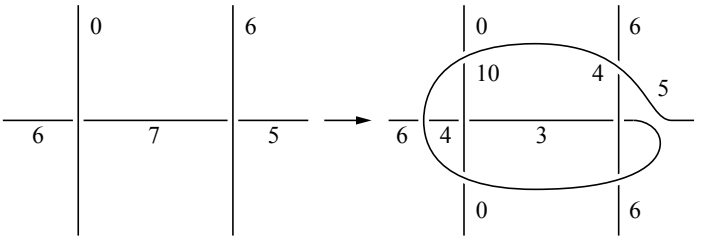

Figure 19

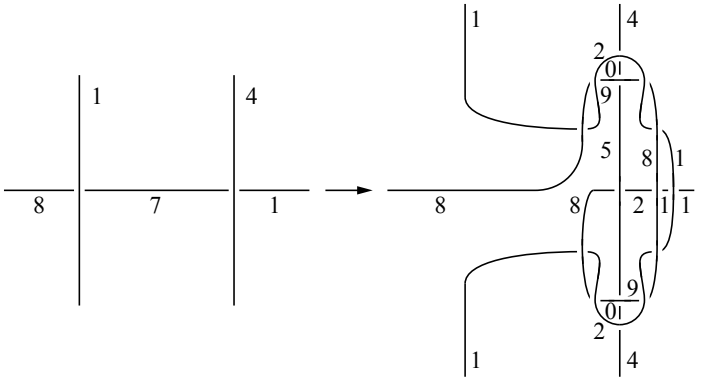

Figure 20

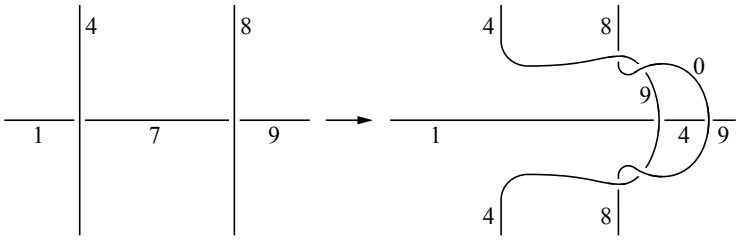

Figure 21

If $(a, b) = (0, 6)$, we transform the diagram as in Figure 19. The case $(a, b) = (6, 0)$ is similar.

If $(a, b) = (1, 4)$, we transform the diagram as in Figure 20. The case $(a, b) = (4, 1)$ is similar.

If $(a, b) = (4, 8)$, we transform the diagram as in following Figure 21. The case $(a, b) = (8, 4)$ is similar. □

Eliminating the color 8.

Lemma 2.5. *Any* 13*-colorable knot has a* 13*-colored diagram D with no arc colored by* 7, 8, 11, *or* 12.

Proof. Let $c = 8$. By the previous lemmas we assume that no arc in D is colored by 7, 11, or 12. We first transform any crossing of the form $\{8|8|8\}$. If there is any such crossing, there is an adjacent crossing of the form $\{8|a|2a+5\}$ or $\{a|8|3-a\}$, where a is in $\mathbb{Z}_{13} \setminus \{7, 8, 11, 12\}$. If $a \neq 1, 3, 4, 5, 9, 10$ then $3 - a \neq 7, 8, 11, 12$ and $2a + 5 \neq 7, 8, 11, 12$ for any a in $\mathbb{Z}_{13} \setminus \{1, 3, 4, 5, 7, 8, 9, 10, 11, 12\}$, so we transform the diagram as in Figures 2 and 3.

If $a = 4, 5, 9$ as an over-arc, we transform the diagram as in Figure 2. Note a cannot be 4, 5, or 9 as an under-arc, otherwise $3 - a = 7, 11, 12$, contradicting our assumption that no arc is colored by 7, 11, or 12. If $a = 1$ as an under-arc we transform the diagram as in Figure 8. Note a cannot be 1 as an over-arc, otherwise $2a + 5 = 7$, contradicting our assumption that no arc is colored by 7. If $a = 3$ as an under-arc, we transform the diagram as in Figure 8. Note a cannot be 3 as an over-arc, otherwise $2a + 5 = 11$, contradicting our assumption that no arc is colored by 11. If $a = 10$ as an under-arc, we transform the diagram as in Figure 8. Note a cannot be 10 as an over-arc, otherwise $2a + 5 = 12$, contradicting our assumption that no arc is colored by 12. Therefore any crossings of the form $\{8|8|8\}$ are removed.

Next, we remove 8 as an over-arc by transforming any crossings of the form $\{a|8|3-a\}$. Since $3 - a \neq 7, 8, 11, 12$, we have $a \neq 4, 5, 9$. Therefore if $a \neq 1, 3, 10$ then $2a + 5 \neq 7, 8, 11, 12$ and $3a + 10 \neq 7, 8, 11, 12$ for any a in $\mathbb{Z}_{13} \setminus \{1, 3, 4, 5, 7, 8, 9, 10, 11, 12\}$, and we transform the diagram as in Figure 4. If $a = 1, 3$ or 10, we transform the diagram as in Figure 9.

We complete the proof of the lemma by removing 8 as an under-arc in a case-by-case method. We first consider the case where 8 is an under-arc connecting two crossings of the form $\{8|a|2a+5\}$. Since $2a + 5 \neq 7, 8, 11, 12$, we have $a \neq 1, 3, 10$. If $a \neq 5, 9$ then $3a + 10 \neq 7, 8, 11, 12$ and $4a + 2 \neq 7, 8, 11, 12$ for any a in $\mathbb{Z}_{13} \setminus \{1, 3, 5, 7, 8, 9, 10, 11, 12\}$, and we transform the diagram as in Figure 5. If $a = 5$, we transform the diagram as in Figure 22. If $a = 9$, we transform the diagram as in Figure 23.

Now we consider the case where 8 is an under-arc connecting two crossings of the forms $\{2a+5|a|8\}$ and $\{8|b|2b+5\}$, where $a \neq b$ for any a and b in $\mathbb{Z}_{13} \setminus \{1, 3, 7, 8, 10, 11, 12\}$. (Note $a, b \neq 1, 3, 10$, otherwise $2a + 5 = 7, 11, 12$ or $2b + 5 = 7, 11, 12$.) If $(a, b) \neq (0, 2), (2, 0), (0, 6), (6, 0), (2, 5), (5, 2)$ then either

$$2a - 2b - 5 \neq 7, 8, 11, 12 \quad \text{and} \quad 2a - b \neq 7, 8, 11, 12$$

or

$$2b - 2a - 5 \neq 7, 8, 11, 12 \quad \text{and} \quad 2b - a \neq 7, 8, 11, 12$$

for any a and b in $\mathbb{Z}_{13} \setminus \{1, 3, 7, 8, 10, 11, 12\}$, and we transform the diagram as in Figure 12.

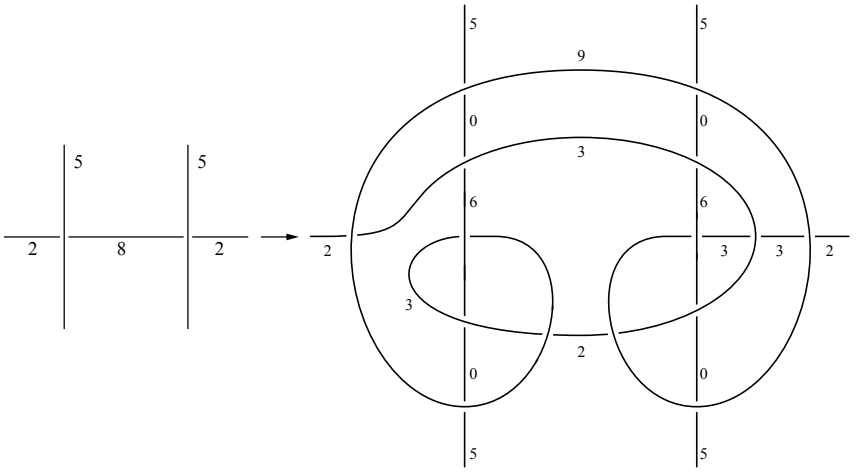

Figure 22

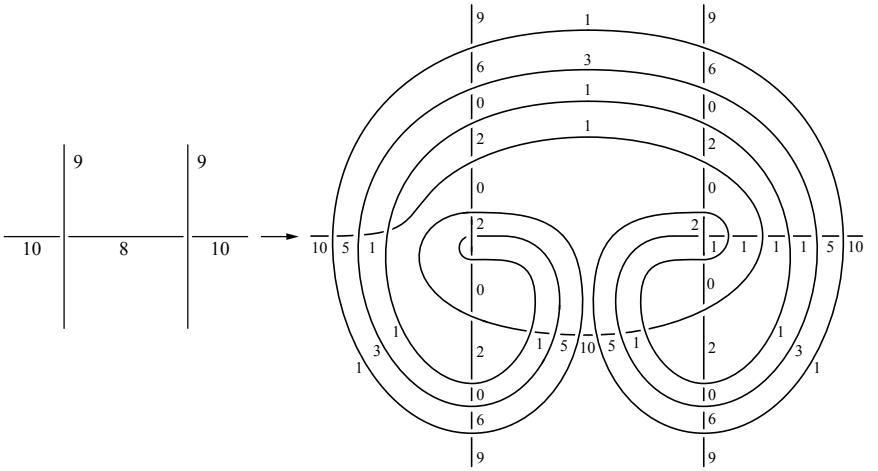

Figure 23

If $(a, b) = (0, 2)$, we transform the diagram as in Figure 24. The case $(a, b) = (2, 0)$ is similar.

If $(a, b) = (0, 6)$, we transform the diagram as in Figure 25. The case $(a, b) = (6, 0)$ is similar.

If $(a, b) = (2, 5)$, we transform the diagram as in Figure 26. The case $(a, b) = (5, 2)$ is similar. □

Eliminating the color 6.

Lemma 2.6. *Any* 13*-colorable knot has a* 13*-colored diagram* D *with no arc colored by* 6, 7, 8, 11, *or* 12.

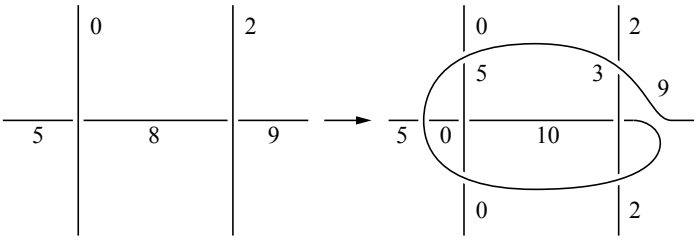

Figure 24

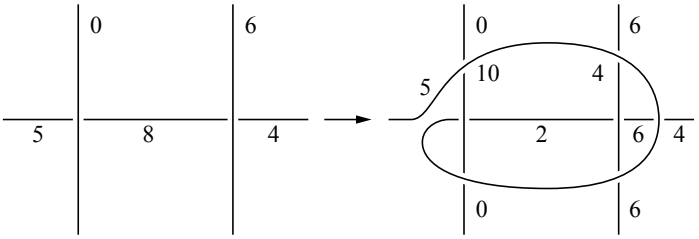

Figure 25

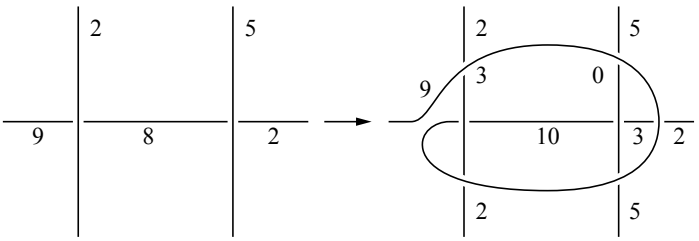

Figure 26

Proof. Let $c = 6$. By the previous lemmas we assume that no arc in D is colored by 7, 8, 11, or 12. We first transform any crossing of the form $\{6|6|6\}$. If there is any such crossing, there is an adjacent crossing of the form $\{6|a|2a+7\}$ or $\{a|6|12-a\}$, where a is in $\mathbb{Z}_{13} \setminus \{6, 7, 8, 11, 12\}$. With the exceptions of $a = 0, 2, 9$ as an over-arc (when $2a + 7 = 7, 8, 11, 12$) and $a = 0, 1, 4, 5$ as an under-arc (when $12 - a = 7, 8, 11, 12$), we transform the diagram as in Figures 2 and 3.

Now we must check when $a = 0, 2, 9$ as an under-arc. First and foremost a cannot equal 0 as an under-arc, otherwise $12 - a = 12$, contradicting our assumption that no arc is colored by 12. If $a = 2, 9$ as an under-arc, we transform the diagram as in Figure 8. Therefore any crossings of the form $\{6|6|6\}$ are removed.

Next, we remove 6 as an over-arc by transforming any crossings of the form $\{a|6|12-a\}$. Since $12 - a \neq 6, 7, 8, 11, 12$, we have $a \neq 0, 1, 4, 5$. With the exceptions of $a = 2, 9$ (when $2a + 7 = 6, 7, 8, 11, 12$ and $3a + 1 = 6, 7, 8, 11, 12$),

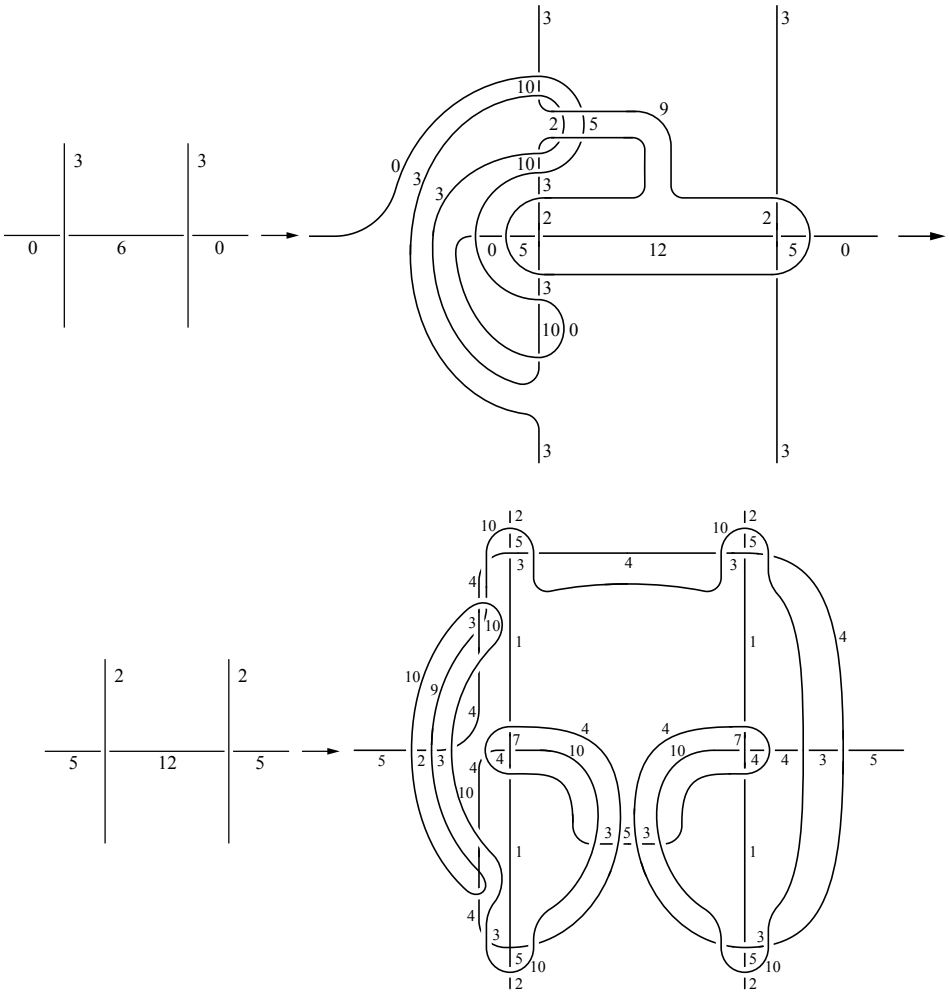

Figure 27

we transform the diagram as in Figure 4. If $a = 2$ or $a = 9$, we transform the diagram as in Figure 9.

We complete the proof of the lemma by removing 6 as an under-arc in a case-by-case method. We first consider the case where 6 is an under-arc connecting two crossings of the form $\{6|a|2a+7\}$. Since $2a + 7 \neq 6, 7, 8, 11, 12$, we have $a \neq 0, 2, 9$. If $a \neq 1, 3, 4$ then $3a + 1 \neq 6, 7, 8, 11, 12$ and $4a + 8 \neq 6, 7, 8, 11, 12$, so we transform the diagram as in Figure 5. If $a = 1$, we transform the diagram as in Figure 11. If $a = 3$, we transform the diagram as in Figures 27 and 28. If $a = 4$, we transform the diagram as in Figure 11.

Now we consider the case where 6 is an under-arc connecting two crossings of the forms $\{2a+7|a|6\}$ and $\{6|b|2b+7\}$, where $a \neq b$ for any a and b in

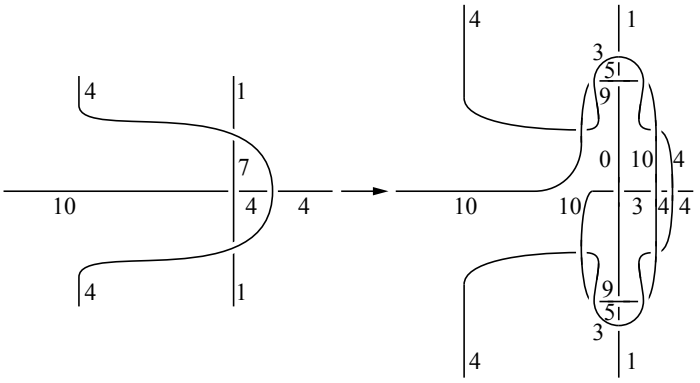

Figure 28

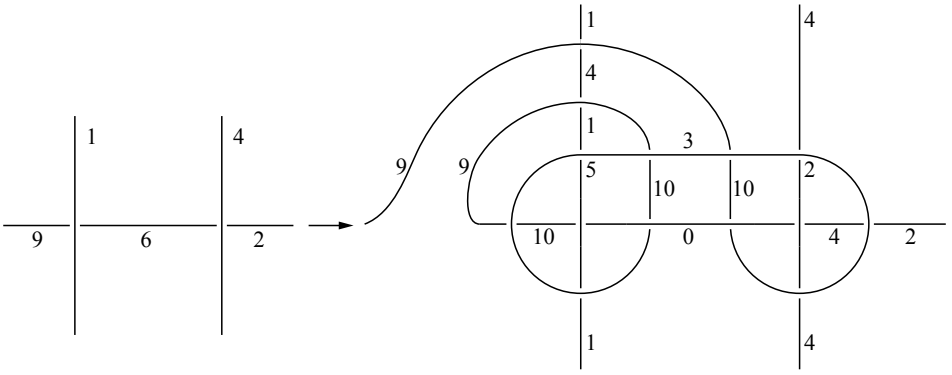

Figure 29

$\mathbb{Z}_{13} \setminus \{0, 2, 6, 7, 8, 9, 11, 12\}$. (Note $a, b \neq 0, 2, 9$, otherwise $2a + 7 = 7, 8, 11, 12$ or $2b + 7 = 7, 8, 11, 12$.)

If $(a, b) \neq (1, 4), (4, 1)$ then either

$$2a - 2b - 7 \neq 6, 7, 8, 11, 12 \quad \text{and} \quad 2a - b \neq 6, 7, 8, 11, 12$$

or

$$2b - 2a - 7 \neq 6, 7, 8, 11, 12 \quad \text{and} \quad 2b - a \neq 6, 7, 8, 11, 12$$

for any a and b in $\mathbb{Z}_{13} \setminus \{0, 2, 6, 7, 8, 9, 11, 12\}$, and we transform the diagram as in Figure 12.

If $(a, b) = (1, 4)$, we transform the diagram as in Figure 29. The case $(a, b) = (4, 1)$ is similar. □

Eliminating the color 1.

Lemma 2.7. *Any* 13*-colorable knot has a* 13*-colored diagram* D *with no arc colored by* 1, 6, 7, 8, 11, *or* 12.

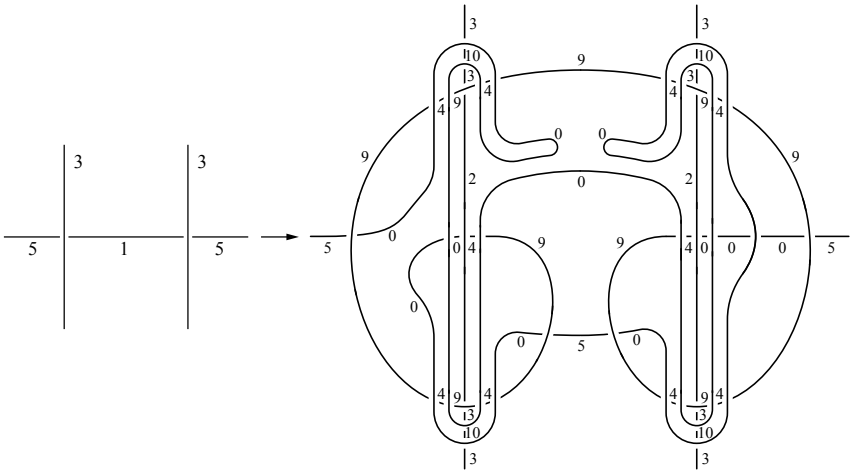

Figure 30

Proof. Let $c = 1$. By the previous lemmas we assume that no arc in D is colored by 6, 7, 8, 11, or 12. We first transform any crossing of the form $\{1\,|\,1\,|\,1\}$. If there is any such crossing, there is an adjacent crossing of the form $\{1\,|\,a\,|\,2a{+}12\}$ or $\{a\,|\,1\,|\,2{-}a\}$, where a is in $\mathbb{Z}_{13} \setminus \{1, 6, 7, 8, 11, 12\}$. With the exceptions of $a = 0, 4, 10$ as an over-arc (when $2a + 12 = 6, 7, 8, 11, 12$) and $a = 3, 4, 9$ as an under-arc (when $2 - a = 6, 7, 8, 11, 12$), we transform the diagram as in Figures 2 and 3.

Now we must check when $a = 0, 4, 10$ as an under-arc. We know a cannot be 4 as an under-arc, otherwise $2 - a = 11$, contradicting our assumption that no arc is colored by 11. If $a = 0$ or $a = 10$ as an under-arc, we transform the diagram as in Figure 8. Therefore any crossings of the form $\{1\,|\,1\,|\,1\}$ are removed.

Next, we remove 1 as an over-arc by transforming any crossings of the form $\{a\,|\,1\,|\,2{-}a\}$. Since $2{-}a \neq 1, 6, 7, 8, 11, 12$, we have $a \neq 3, 4, 9$. With the exceptions of $a = 0, 10$ (when $2a + 12 = 1, 6, 7, 8, 11, 12$ and $3a + 11 = 1, 6, 7, 8, 11, 12$), we transform the diagram as in Figure 4. If $a = 0$ or $a = 10$, we transform the diagram as in Figure 9.

We complete the proof by removing 1 as an under-arc in a case-by-case method. We first consider the case where 1 is an under-arc connecting two crossings of the form $\{1\,|\,a\,|\,2a{+}12\}$. Since $2a + 12 \neq 1, 6, 7, 8, 11, 12$, we have $a \neq 0, 4, 10$. If $a \neq 3, 9$ then $3a + 11 \neq 1, 6, 7, 8, 11, 12$ and $4a + 10 \neq 1, 6, 7, 8, 11, 12$, so we transform the diagram as in Figure 5. If $a = 3$, we transform the diagram as in Figure 30. If $a = 9$, we transform the diagram as in Figure 31.

Now we consider the case where 1 is an under-arc connecting two crossings of the forms $\{2a{+}12\,|\,a\,|\,1\}$ and $\{1\,|\,b\,|\,2b{+}12\}$, where $a \neq b$ for any a and b in $\mathbb{Z}_{13} \setminus \{0, 1, 4, 6, 7, 8, 10, 11, 12\}$. (Note $a, b \neq 0, 4, 10$, otherwise $2a{+}12 = 1, 6, 7, 8, 11, 12$ or $2b{+}12 = 1, 6, 7, 8, 11, 12$.) If $(a, b) \neq (2, 5), (5, 2), (3, 5), (5, 3)$ then

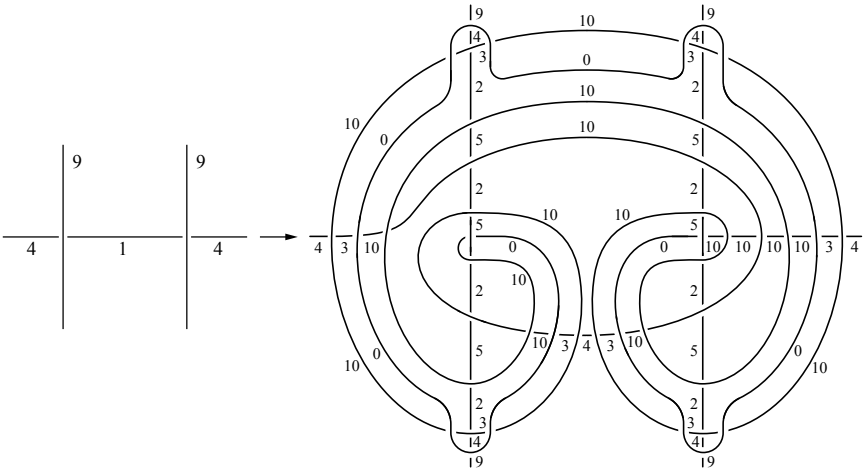

Figure 31

either

$$2a - 2b - 12 \neq 1, 6, 7, 8, 11, 12 \quad \text{and} \quad 2a - b \neq 1, 6, 7, 8, 11, 12$$

or

$$2b - 2a - 12 \neq 1, 6, 7, 8, 11, 12 \quad \text{and} \quad 2b - a \neq 1, 6, 7, 8, 11, 12$$

for any a and b in $\mathbb{Z}_{13} \setminus \{0, 1, 4, 6, 7, 8, 10, 11, 12\}$, and we transform the diagram as in Figure 12.

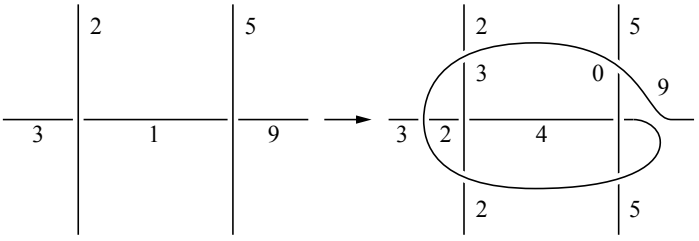

Figure 32

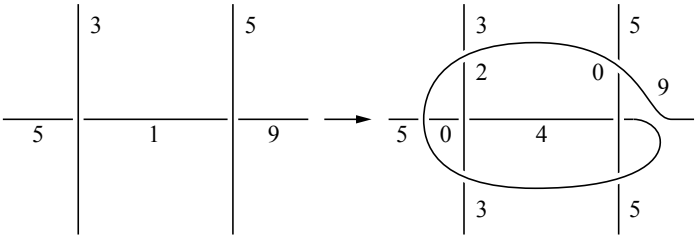

Figure 33

If $(a, b) = (2, 5)$, we transform the diagram as in Figure 32. The case $(a, b) = (5, 2)$ is similar.

If $(a, b) = (3, 5)$, we transform the diagram as in Figure 33. The case $(a, b) = (5, 3)$ is similar. □

Eliminating the color 10.

Lemma 2.8. *Any* 13*-colorable knot has a* 13*-colored diagram D with no arc colored by* 1, 6, 7, 8, 10, 11, *or* 12.

Proof. Let $c = 10$. By the previous lemmas we assume that no arc in D is colored by 1, 6, 7, 8, 11, or 12. We first transform any crossing of the form $\{10|10|10\}$. If there is any such crossing, there is an adjacent crossing of the form $\{10|a|2a+3\}$ or $\{a|10|7-a\}$, where a is in $\mathbb{Z}_{13} \setminus \{1, 6, 7, 8, 10, 11, 12\}$. With the exceptions of $a = 2, 4, 9$ as an over-arc (when $2a+3 = 1, 6, 7, 8, 11, 12$) and $a = 0, 9$ as an under-arc (when $7-a = 1, 6, 7, 8, 11, 12$), we transform the diagram as in Figures 2 and 3.

Now we must check when $a = 2, 4, 9$ as an under-arc. We know a cannot be 9 as an under-arc, otherwise $7 - a = 11$, contradicting our assumption that no arc is colored by 11. If $a = 2$ or $a = 4$ as an under-arc, we transform the diagram as in Figure 8. Therefore any crossings of the form $\{10|10|10\}$ are removed.

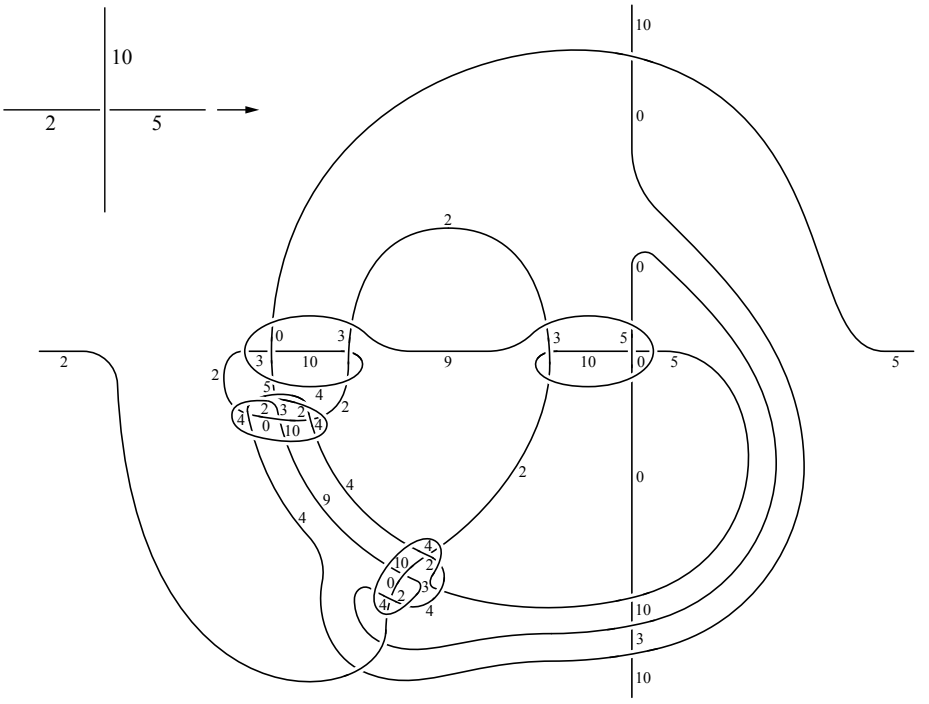

Figure 34

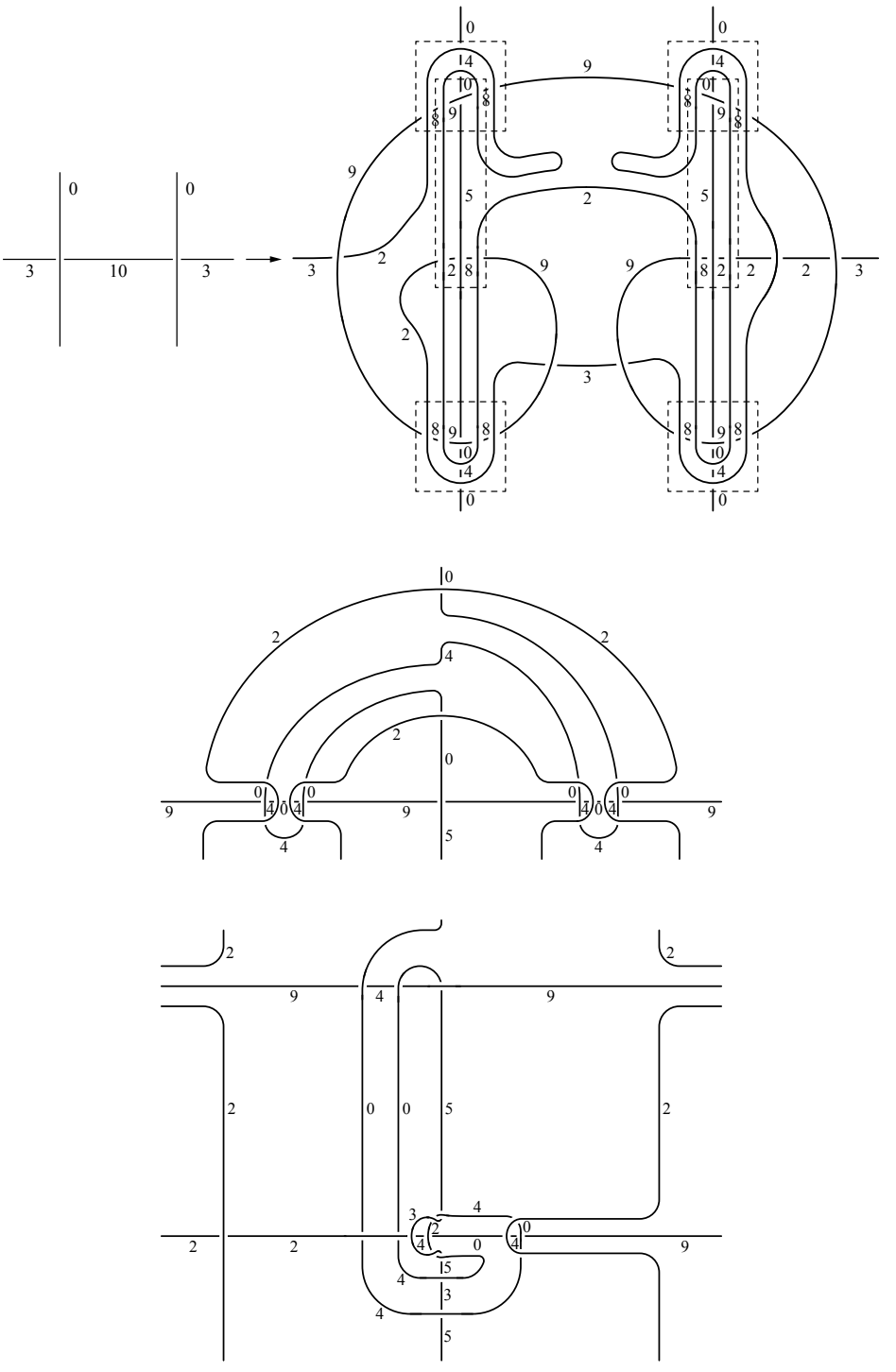

Figure 35

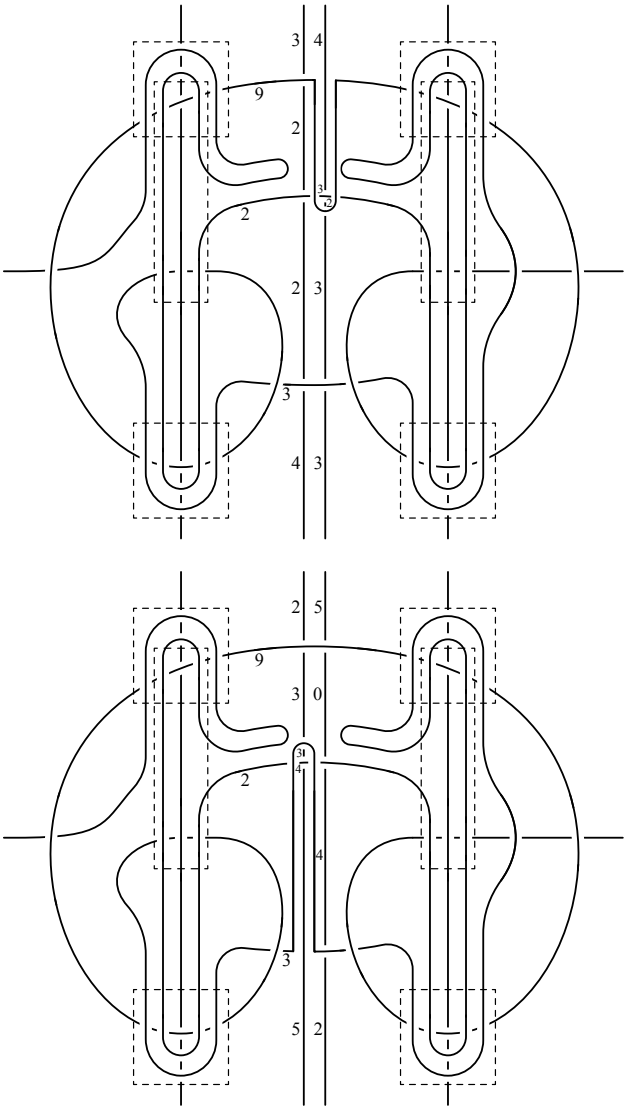

Figure 36

Next, we remove 10 as an over-arc by transforming any crossings of the form $\{a\,|\,10\,|\,7-a\}$. Since $7-a \neq 1, 6, 7, 8, 10, 11, 12$, we have $a \neq 0, 9$. With the exceptions of $a = 2, 4, 5$ (when $2a+3 = 1, 6, 7, 8, 10, 11, 12$ and $3a+6 = 1, 6, 7, 8, 10, 11, 12$), we transform the diagram as in Figure 4. If $a = 2$, we transform the diagram as in Figure 34. If $a = 4$, we transform the diagram as in Figure 9. If $a = 5$, since $7-a = 2$, we transform the diagram similarly to Figure 34, i.e., $a = 2$.

We complete the proof by removing 10 as an under-arc in a case-by-case method. We first consider the case where 10 is an under-arc connecting two crossings of the

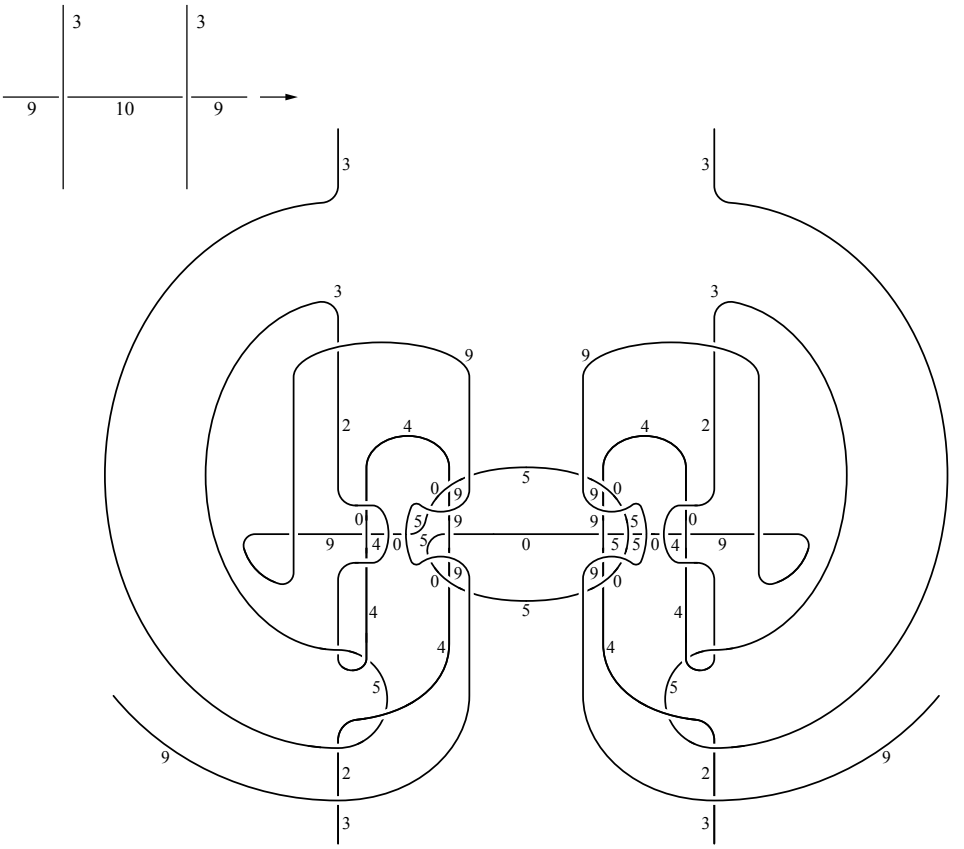

Figure 37

form $\{10|a|2a+3\}$. Since $2a+3 \neq 1, 6, 7, 8, 10, 11, 12$, we have $a \neq 2, 4, 9$. So, we need to check $a = 0, 3, 5$. If $a = 0$, we transform the diagram as in Figure 35, and we shall refer to this transformation throughout Lemma 2.8. As such, two variations of this transformation are given in Figure 36. If $a = 3$, we transform the diagram as in Figure 37. If $a = 5$, we transform the diagram as in Figure 38. Note the center of $a = 5$ as well as the six dashed boxes are the same transformations we used for $a = 0$ and its variations. Also, there are two arcs colored by 10, each of which are transformed by $a = 3$ as in Figure 37.

Now we consider the case where 10 is an under-arc. There are six such cases: $(a, b) = (0, 3), (3, 0), (0, 5), (5, 0), (3, 5), (5, 3)$. If $(a, b) = (0, 3)$, we transform the diagram as in Figure 39. For eliminating the 10 arc, see the variations of $a = 0$ in Figure 36. The case $(a, b) = (3, 0)$ is similar.

If $(a, b) = (0, 5)$, we transform the diagram as in Figure 40. For eliminating the 10 arc, see $a = 5$ in Figure 38; however, we will use the variations of $a = 0$ in Figure 36 for the center. The case $(a, b) = (5, 0)$ is similar.

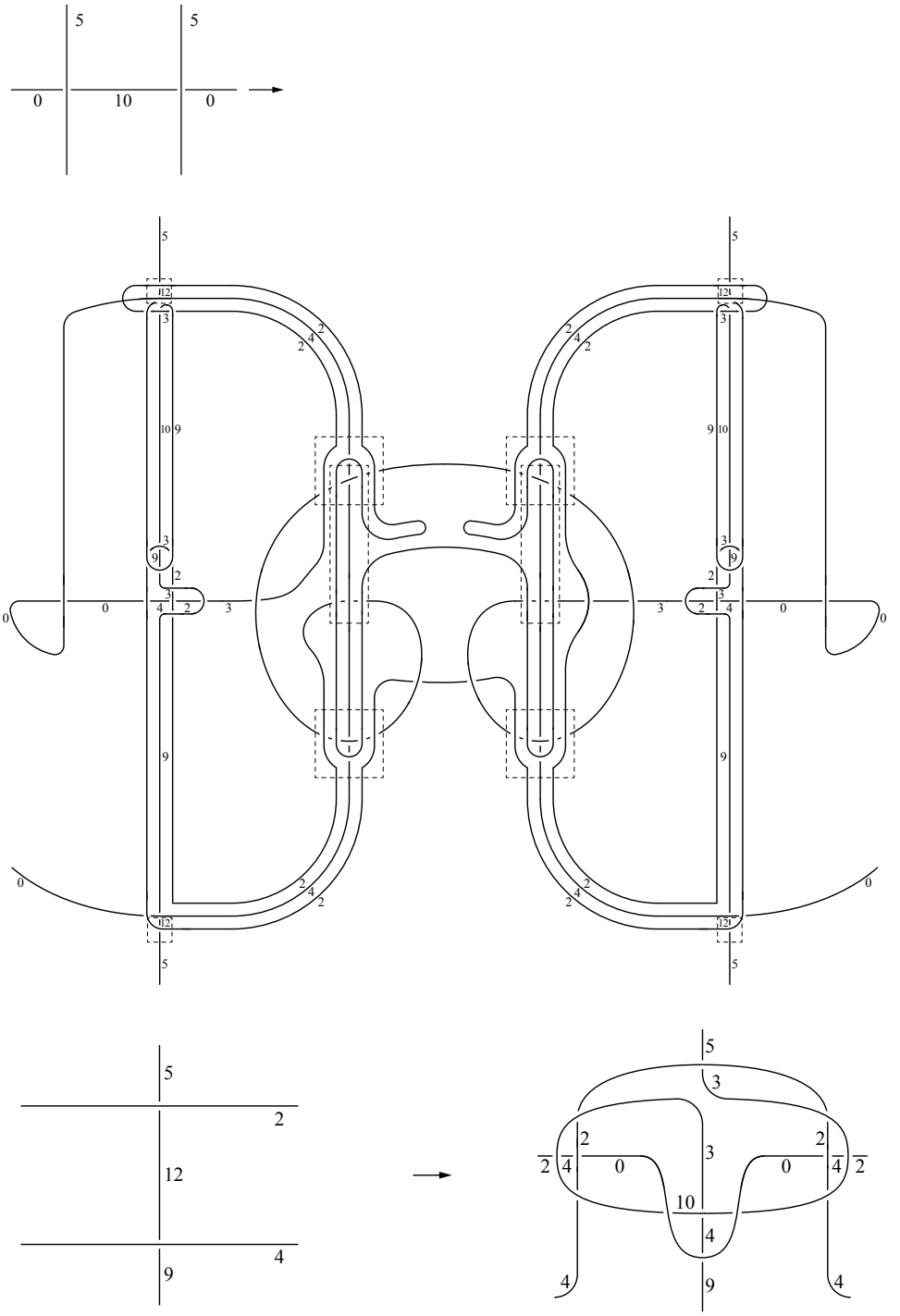
5
5
0
10
0
5
12
3
2
4
2
10
9
3
9
2
3
0
4
2
3
0
0
9
0
2
4
2
12
5
5
12
3
2
4
2
9
10
3
9
2
3
3
2
4
0
0
9
0
2
4
2
12
5
5
2
12
4
9
5
3
2
2
3
2
4
0
0
4
2
10
4
4
9
4

Figure 38

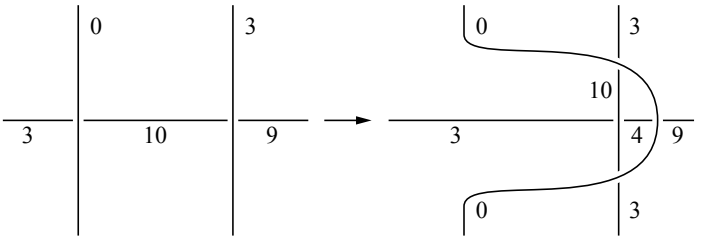

Figure 39

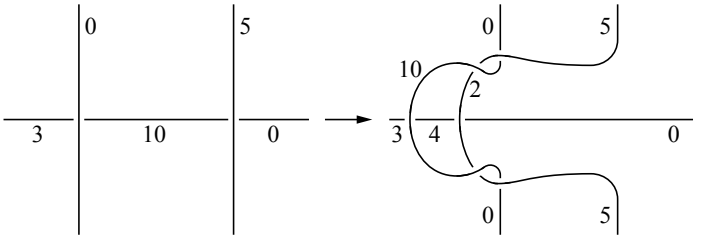

Figure 40

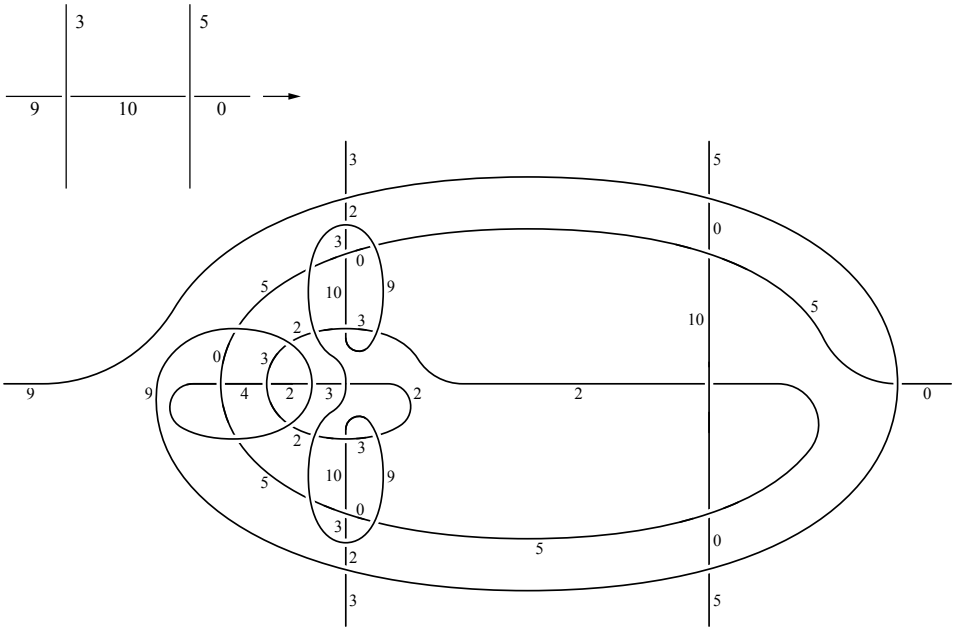

Figure 41

If $(a, b) = (3, 5)$, we transform the diagram as in Figure 41. For eliminating the 10 arcs, see the $(a, b) = (0, 3)$ case in Figure 39 and the $a = 5$ case in Figure 38 using the variations in Figure 36. The case $(a, b) = (5, 3)$ is similar. □

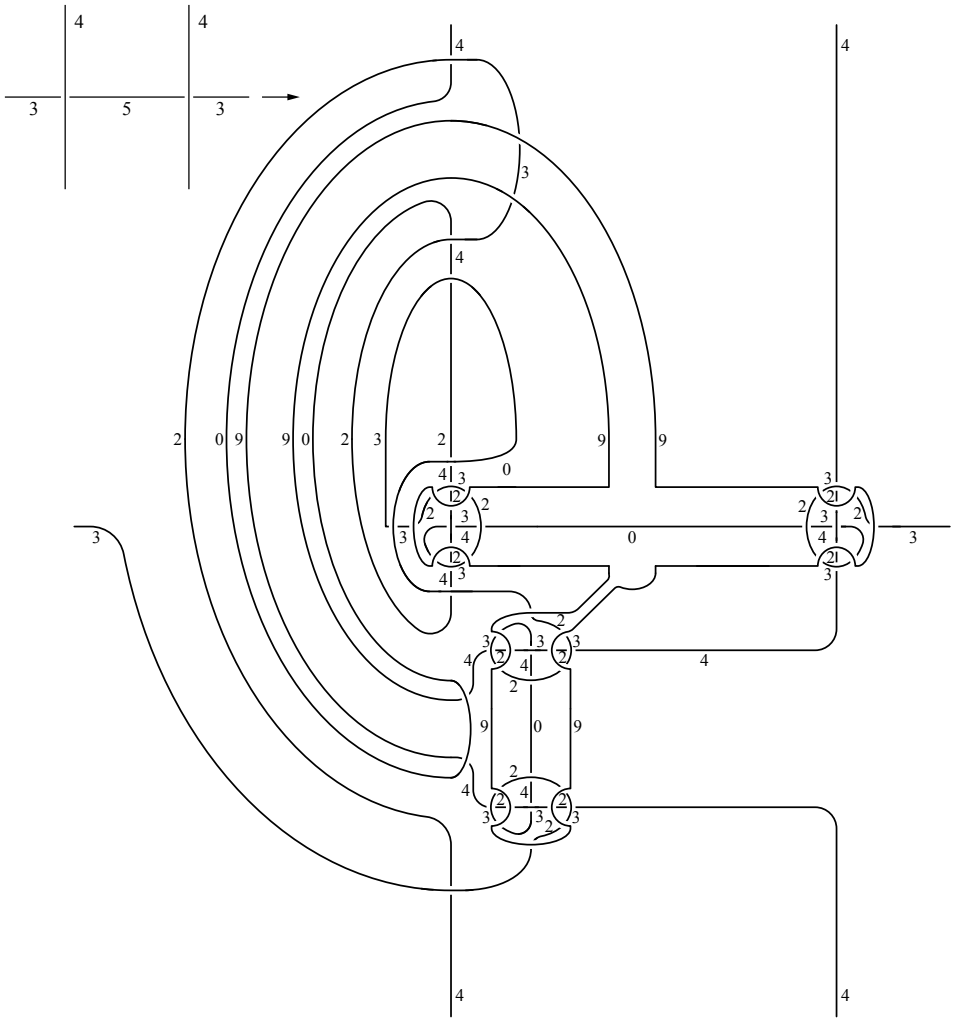

Figure 42

Eliminating the color 5.

Lemma 2.9. *Any* 13*-colorable knot has a* 13*-colored diagram* D *with no arc colored by* 1, 5, 6, 7, 8, 10, 11, *or* 12*.*

Proof. Let $c = 5$. By the previous lemmas we assume that no arc in D is colored by 1, 6, 7, 8, 10, 11, or 12. We first transform any crossing of the form $\{5|5|5\}$. If there is any such crossing, there is an adjacent crossing of the form $\{5|a|2a+8\}$, where a is in $\mathbb{Z}_{13} \setminus \{1, 5, 6, 7, 8, 10, 11, 12\}$. Since $10 - a = 1, 6, 7, 8, 10, 11, 12$ when $a = 0, 2, 3, 4, 9$, we know a cannot be an under-arc. Therefore, with the exceptions of $a = 0, 2, 3$ as an over-arc (when $2a + 8 = 1, 5, 6, 7, 8, 10, 11, 12$), we transform the diagram as in Figure 2. Therefore any crossings of the form $\{5|5|5\}$ are removed.

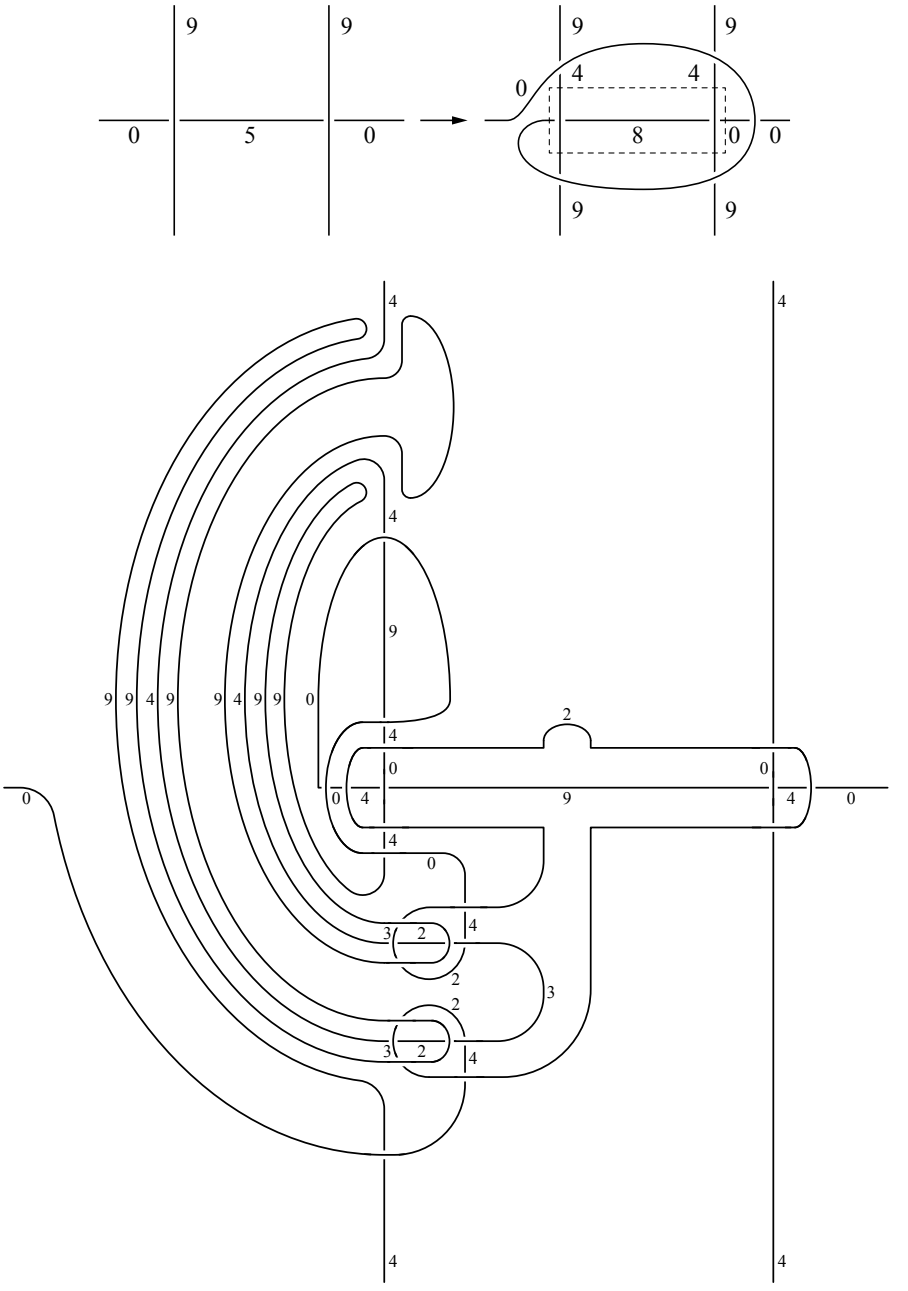

Figure 43

Next, we remove 5 as an over-arc by transforming any crossings of the form $\{a\,|\,5\,|\,10-a\}$. Since $10 - a \neq 1, 5, 6, 7, 8, 10, 11, 12$, we have $a \neq 0, 2, 3, 4, 9$. Therefore, 5 cannot be an over-arc.

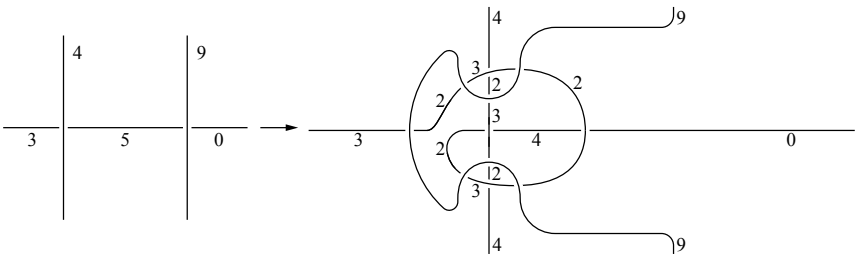

Figure 44

We complete the proof of Lemma 2.8 by removing 5 as an under-arc in a case-by-case method. We first consider the case where 5 is an under-arc connecting two crossings of the form $\{5|a|2a+8\}$. Since $2a+8 \neq 1, 5, 6, 7, 8, 10, 11, 12$, we have $a \neq 0, 2, 3$. So, we need to check $a = 4, 9$. If $a = 4$, we transform the diagram as in Figure 42. If $a = 9$, we transform the diagram as in Figure 43.

Now we consider the case where 5 is an under-arc connecting two crossings of the forms $\{5|a|2a+8\}$ and $\{5|b|2b+8\}$. Since $2a+8, 2b+8 \neq 1, 5, 6, 7, 8, 10, 11, 12$, there are two cases that we need to consider: $(a, b) = (4, 9), (9, 4)$. If $(a, b) = (4, 9)$, we transform the diagram as in Figure 44. The case $(a, b) = (9, 4)$ is similar. □

At the same time we were working on this problem, Bento and Lopes [2015] proved the same result using different techniques.

References

[Bento and Lopes 2015] F. Bento and P. Lopes, "The minimum number of Fox colors modulo 13 is 5", preprint, 2015. arXiv

[Fox 1962] R. H. Fox, "A quick trip through knot theory", pp. 120–167 in *Topology of 3-manifolds and related topics* (Athens, GA, 1961), Prentice-Hall, Englewood Cliffs, N.J., 1962. MR Zbl

[Hayashi et al. 2012] C. Hayashi, M. Hayashi, and K. Oshiro, "On linear n-colorings for knots", *J. Knot Theory Ramifications* **21**:14 (2012), art. ID #1250123. MR Zbl

[Lopes and Matias 2012] P. Lopes and J. Matias, "Minimum number of Fox colors for small primes", *J. Knot Theory Ramifications* **21**:3 (2012), art ID #1250025. MR Zbl

[Nakamura et al. 2013] T. Nakamura, Y. Nakanishi, and S. Satoh, "The pallet graph of a Fox coloring", *Yokohama Math. J.* **59** (2013), 91–97. MR Zbl

[Oshiro 2010] K. Oshiro, "Any 7-colorable knot can be colored by four colors", *J. Math. Soc. Japan* **62**:3 (2010), 963–973. MR Zbl

[Satoh 2009] S. Satoh, "5-colored knot diagram with four colors", *Osaka J. Math.* **46**:4 (2009), 939–948. MR Zbl

Received: 2015-09-29 Revised: 2016-01-05 Accepted: 2016-01-24

emohamed@usf.edu *Mathematics Department, University of South Florida, Tampa, FL 33620, United States*

kerrj@mail.usf.edu *Mathematics Department, University of South Florida, Tampa, FL 33620, United States*

involve

msp.org/involve

INVOLVE YOUR STUDENTS IN RESEARCH

Involve showcases and encourages high-quality mathematical research involving students from all academic levels. The editorial board consists of mathematical scientists committed to nurturing student participation in research. Bridging the gap between the extremes of purely undergraduate research journals and mainstream research journals, *Involve* provides a venue to mathematicians wishing to encourage the creative involvement of students.

MANAGING EDITOR

Kenneth S. Berenhaut Wake Forest University, USA

BOARD OF EDITORS

Colin Adams	Williams College, USA	Suzanne Lenhart	University of Tennessee, USA
John V. Baxley	Wake Forest University, NC, USA	Chi-Kwong Li	College of William and Mary, USA
Arthur T. Benjamin	Harvey Mudd College, USA	Robert B. Lund	Clemson University, USA
Martin Bohner	Missouri U of Science and Technology, USA	Gaven J. Martin	Massey University, New Zealand
Nigel Boston	University of Wisconsin, USA	Mary Meyer	Colorado State University, USA
Amarjit S. Budhiraja	U of North Carolina, Chapel Hill, USA	Emil Minchev	Ruse, Bulgaria
Pietro Cerone	La Trobe University, Australia	Frank Morgan	Williams College, USA
Scott Chapman	Sam Houston State University, USA	Mohammad Sal Moslehian	Ferdowsi University of Mashhad, Iran
Joshua N. Cooper	University of South Carolina, USA	Zuhair Nashed	University of Central Florida, USA
Jem N. Corcoran	University of Colorado, USA	Ken Ono	Emory University, USA
Toka Diagana	Howard University, USA	Timothy E. O'Brien	Loyola University Chicago, USA
Michael Dorff	Brigham Young University, USA	Joseph O'Rourke	Smith College, USA
Sever S. Dragomir	Victoria University, Australia	Yuval Peres	Microsoft Research, USA
Behrouz Emamizadeh	The Petroleum Institute, UAE	Y.-F. S. Pétermann	Université de Genève, Switzerland
Joel Foisy	SUNY Potsdam, USA	Robert J. Plemmons	Wake Forest University, USA
Errin W. Fulp	Wake Forest University, USA	Carl B. Pomerance	Dartmouth College, USA
Joseph Gallian	University of Minnesota Duluth, USA	Vadim Ponomarenko	San Diego State University, USA
Stephan R. Garcia	Pomona College, USA	Bjorn Poonen	UC Berkeley, USA
Anant Godbole	East Tennessee State University, USA	James Propp	U Mass Lowell, USA
Ron Gould	Emory University, USA	Józeph H. Przytycki	George Washington University, USA
Andrew Granville	Université Montréal, Canada	Richard Rebarber	University of Nebraska, USA
Jerrold Griggs	University of South Carolina, USA	Robert W. Robinson	University of Georgia, USA
Sat Gupta	U of North Carolina, Greensboro, USA	Filip Saidak	U of North Carolina, Greensboro, USA
Jim Haglund	University of Pennsylvania, USA	James A. Sellers	Penn State University, USA
Johnny Henderson	Baylor University, USA	Andrew J. Sterge	Honorary Editor
Jim Hoste	Pitzer College, USA	Ann Trenk	Wellesley College, USA
Natalia Hritonenko	Prairie View A&M University, USA	Ravi Vakil	Stanford University, USA
Glenn H. Hurlbert	Arizona State University,USA	Antonia Vecchio	Consiglio Nazionale delle Ricerche, Italy
Charles R. Johnson	College of William and Mary, USA	Ram U. Verma	University of Toledo, USA
K. B. Kulasekera	Clemson University, USA	John C. Wierman	Johns Hopkins University, USA
Gerry Ladas	University of Rhode Island, USA	Michael E. Zieve	University of Michigan, USA

PRODUCTION

Silvio Levy, Scientific Editor

Cover: Alex Scorpan

See inside back cover or msp.org/involve for submission instructions. The subscription price for 2017 is US $175/year for the electronic version, and $235/year (+$35, if shipping outside the US) for print and electronic. Subscriptions, requests for back issues from the last three years and changes of subscribers address should be sent to MSP.

Involve (ISSN 1944-4184 electronic, 1944-4176 printed) at Mathematical Sciences Publishers, 798 Evans Hall #3840, c/o University of California, Berkeley, CA 94720-3840, is published continuously online. Periodical rate postage paid at Berkeley, CA 94704, and additional mailing offices.

Involve peer review and production are managed by EditFlow® from Mathematical Sciences Publishers.

PUBLISHED BY

mathematical sciences publishers

nonprofit scientific publishing

http://msp.org/

© 2017 Mathematical Sciences Publishers

involve

2017 vol. 10 no. 2

Stability analysis for numerical methods applied to an inner ear model 181
KIMBERLEY LINDENBERG, KEES VUIK AND PIETER W. J. VAN HENGEL

Three approaches to a bracket polynomial for singular links 197
CARMEN CAPRAU, ALEX CHICHESTER AND PATRICK CHU

Symplectic embeddings of four-dimensional ellipsoids into polydiscs 219
MADELEINE BURKHART, PRIERA PANESCU AND MAX TIMMONS

Characterizations of the round two-dimensional sphere in terms of closed geodesics 243
LEE KENNARD AND JORDAN RAINONE

A necessary and sufficient condition for coincidence with the weak topology 257
JOSEPH CLANIN AND KRISTOPHER LEE

Peak sets of classical Coxeter groups 263
ALEXANDER DIAZ-LOPEZ, PAMELA E. HARRIS, ERIK INSKO AND DARLEEN PEREZ-LAVIN

Fox coloring and the minimum number of colors 291
MOHAMED ELHAMDADI AND JEREMY KERR

Combinatorial curve neighborhoods for the affine flag manifold of type A_1^1 317
LEONARDO C. MIHALCEA AND TREVOR NORTON

Total variation based denoising methods for speckle noise images 327
ARUNDHATI BAGCHI MISRA, ETHAN LOCKHART AND HYEONA LIM

A new look at Apollonian circle packings 345
ISABEL CORONA, CAROLYNN JOHNSON, LON MITCHELL AND DYLAN O'CONNELL

1944-4176(2017)10:2;1-B